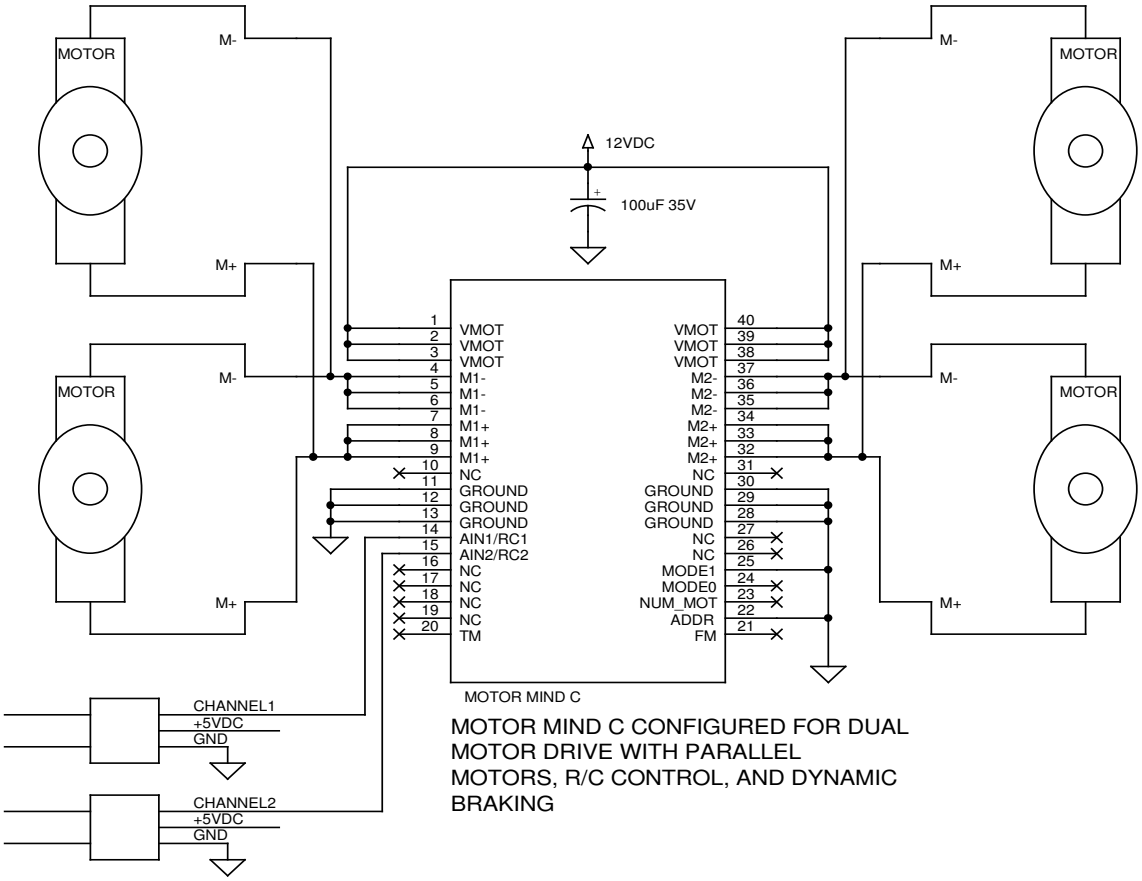

MOTOR MIND C CONFIGURED FOR DUAL MOTOR DRIVE WITH PARALLEL MOTORS, R/C CONTROL, AND DYNAMIC BRAKING

R/C RECEIVER CONNECTIONS