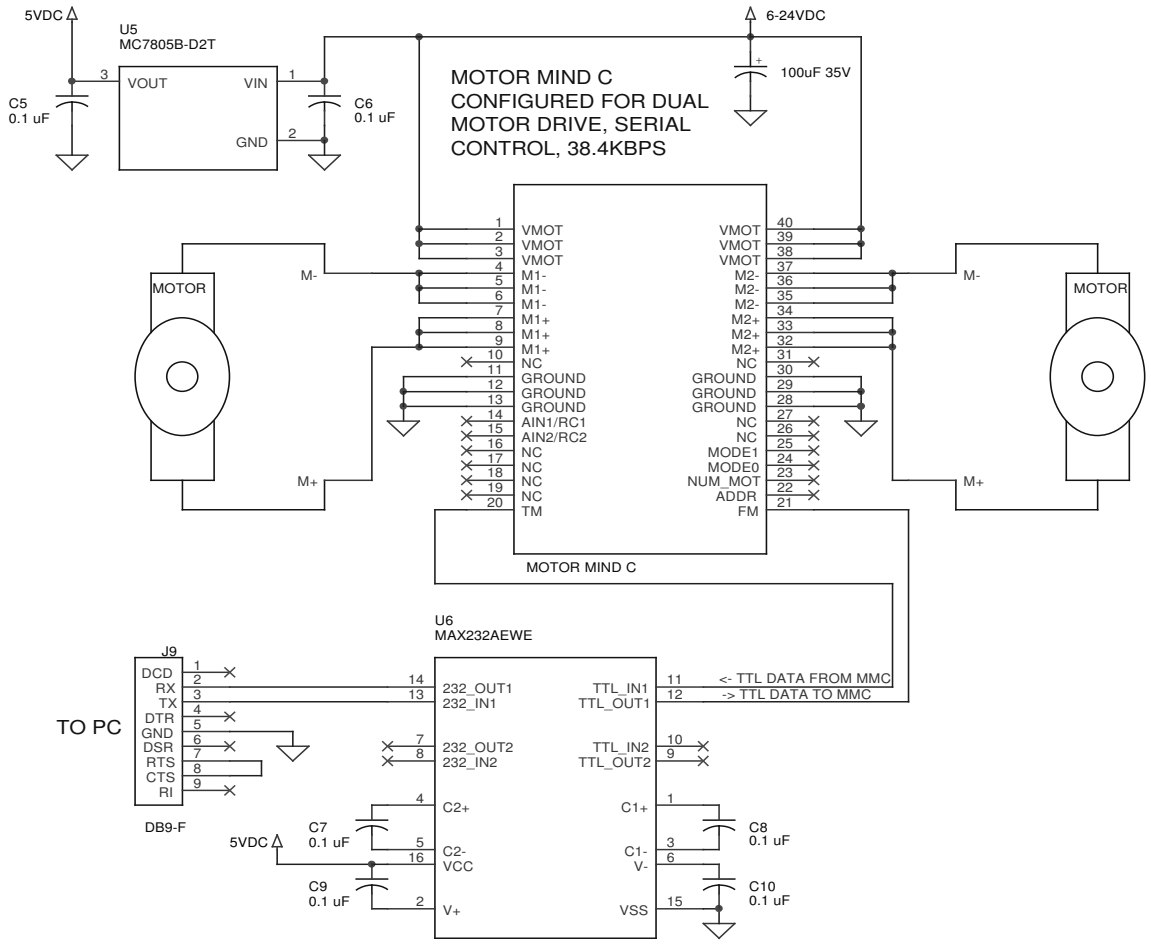
5VDC
U5
MC7805B-D2T
VOUT
VIN
GND
C5
0.1 uF
C6
0.1 uF
6-24VDC
100uF 35V
MOTOR MIND C
CONFIGURED FOR DUAL
MOTOR DRIVE, SERIAL
CONTROL, 38.4KBPS
VMOT
M1-
M1+
NC
GROUND
AIN1/RC1
AIN2/RC2
TM
M2-
M2+
MODE1
MODE0
NUM_MOT
ADDR
FM
MOTOR
M-
M+
MOTOR MIND C
U6
MAX232AEWE
J9
DCD
RX
TX
DTR
GND
DSR
RTS
CTS
RI
DB9-F
TO PC
232_OUT1
232_IN1
232_OUT2
232_IN2
TTL_IN1
TTL_OUT1
TTL_IN2
TTL_OUT2
<- TTL DATA FROM MMC
-> TTL DATA TO MMC
C2+
C2-
VCC
V+
C1+
C1-
V-
VSS
C7
0.1 uF
C8
0.1 uF
C9
0.1 uF
C10
0.1 uF